REVISION HISTORY				
ZONE	REV	DESCRIPTION	DATE	APPROVED
	-	INIITAL RELEASE	2019/10/27	HHMI\\arnoldj

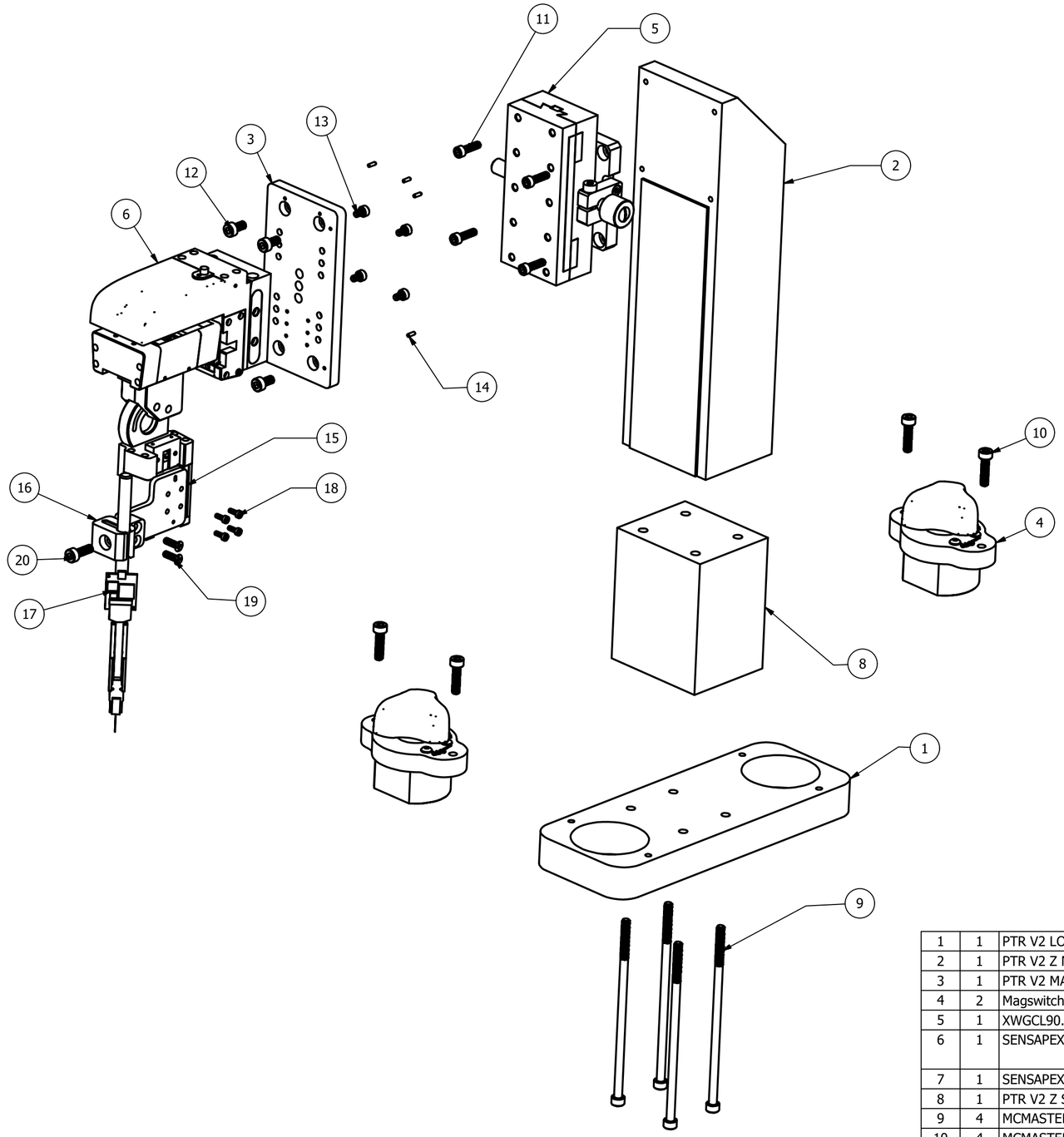

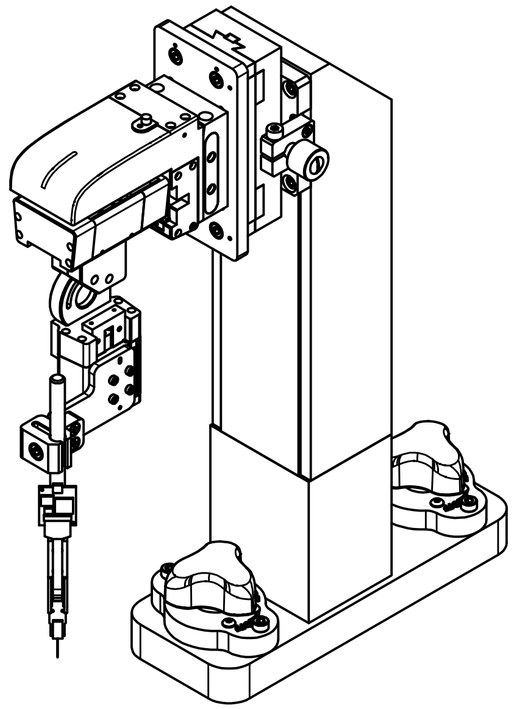

ITEM	QTY	FILE NAME	PART NUMBER	VENDOR	DESCRIPTION
1	1	PTR V2 LOWER MBASE.ipt	J007473	HHMI: JRC - ID&F	PTR V2 LOWER MBASE
2	1	PTR V2 Z MOUNT.ipt	J007471	HHMI: JRC - ID&F	PTR V2 Z MOUNT
3	1	PTR V2 MAN Z BASE PLATE.ipt	J007472	HHMI: JRC - ID&F	PTR MAN Z BASE PLATE
4	2	Magswitch 8100005 - MagJig150.ipt	8100005	MAG-TOOLS	MAGNETIC CLAMP, MAGJIG 150, 40MM DIA
5	1	XWGCL90.iam	XWGCL90	MISUMI	RACK AND PINION STAGE, 70MM TRAVEL
6	1	SENSAPEX uMP 3AXIS.iam	uMP	SENSAPEX	MICROMANIPULATOR, 3 AXIS, 20x20x20 MM TRAVEL
7	1	SENSAPEX PROBE MOUNT.ipt		HHMI: JRC - ID&F	
8	1	PTR V2 Z SPACER.ipt	J007631	HHMI: JRC - ID&F	PTR V2 Z SPACER
9	4	MCMASTER 91251A193 8-32x4 SHCS STEEL.ipt	91251A193	MCMASTER	SCREW, SHC, 8-32 x 4 L , STEEL
10	4	MCMASTER 91292A118_M4x16 SHCS SS.ipt	91292A118	MCMASTER	SCREW, SHC, M4 x 16 SHCS SS
11	4	MCMASTER 92196A148_6-32 x 0_5L SHCS SS.ipt	92196A148	MCMASTER	SCREW, SHC, 6-32 x 1/2" L SS
12	4	MCMASTER 92290A140 M4x8 SHCS SS.ipt	92290A140	MCMASTER	SCREW, SHC, M4 x 8, SS
13	4	MCMASTER 91292A110 M3x5 SHCS SS.ipt	91292A110	MCMASTER	SCREW, SHC, M3 x 5, SS
14	6	MCMASTER 90145A414 DOWEL PIN 0_0625 DIA x 0_1875 L SS.ipt	90145A414	MCMASTER	PIN, DOWEL, SS, 1/16 DIA x 3/16 L
15	1	PTR MANIPULATOR OFFSET PLATE.ipt	J007476	HHMI: JRC - ID&F	MOUNTS TO MANIPULATOR
16	1	PTR V2 ROD MOUNT 0_250 DIA.ipt	J007475	HHMI: JRC - ID&F	MANIPULATOR PROBE MOUNT 0_250 DIA SHAFT
17	1	NEUROPIXELS 3A ENGINEERING PROTOTYPE PROBE AND ROD HOLDER.iam	J007802	HHMI: JRC - ID&F	NEUROPIXELS 3A ENGINEERING PROTOTYPE PROBE AND ROD HOLDER
18	4	MCMASTER 91292A831 M2x6 SHCS SS.ipt	91292A831	MCMASTER	SCREW, SHC, M2 x 6, SS
19	2	MCMASTER 92010A120 M3 x 10 FHPS SS.ipt	92010A120	MCMASTER	SCREW, FHP, M3 x 10, SS
20	1	MCMASTER 91292A117 M4x12 SHCS SS.ipt	91292A117	MCMASTER	SCREW, SHC, M4 X 0.7 X 12, SS

PARTS LIST

NOTICE:
INFORMATION CONTAINED IN THIS DOCUMENT OR ANY REPRODUCTION THEREOF, IS PROPRIETARY INFORMATION AND PROPERTY OF HOWARD HUGHES MEDICAL INSTITUTE. IT SHALL NOT BE DISCLOSED, COPIED, DUPLICATED OR USED FOR MANUFACTURE, PRODUCTION OR PROCUREMENT, WITHOUT THE EXPRESS WRITTEN PERMISSION OF HOWARD HUGHES MEDICAL INSTITUTE.

(UNLESS SPECIFIED OTHERWISE)
PRIMARY UNITS: INCHES
[SECONDARY UNITS]: MILLIMETERS

PRIMARY TOLERANCES:

X.X	± 0.020
X.XX	± 0.010
X.XXX	± 0.005
X.XXXX	± 0.0005
ANGULAR	± 0.5 DEG

- DO NOT SCALE DRAWING -

THIRD ANGLE PROJECTION:

hhmi Howard Hughes Medical Institute

hhmi janelia Research Campus

PTR V2 MANIPULATOR ASSEMBLY.iam

SIZE	PART NUMBER	REV	SHEET
C	J008190	-	1 OF 1